SE	SWEDEN

Diagram / Parts List

DUB186

CORDLESS BLOWER

2021/11

(SE) DUB186 / CORDLESS BLOWER

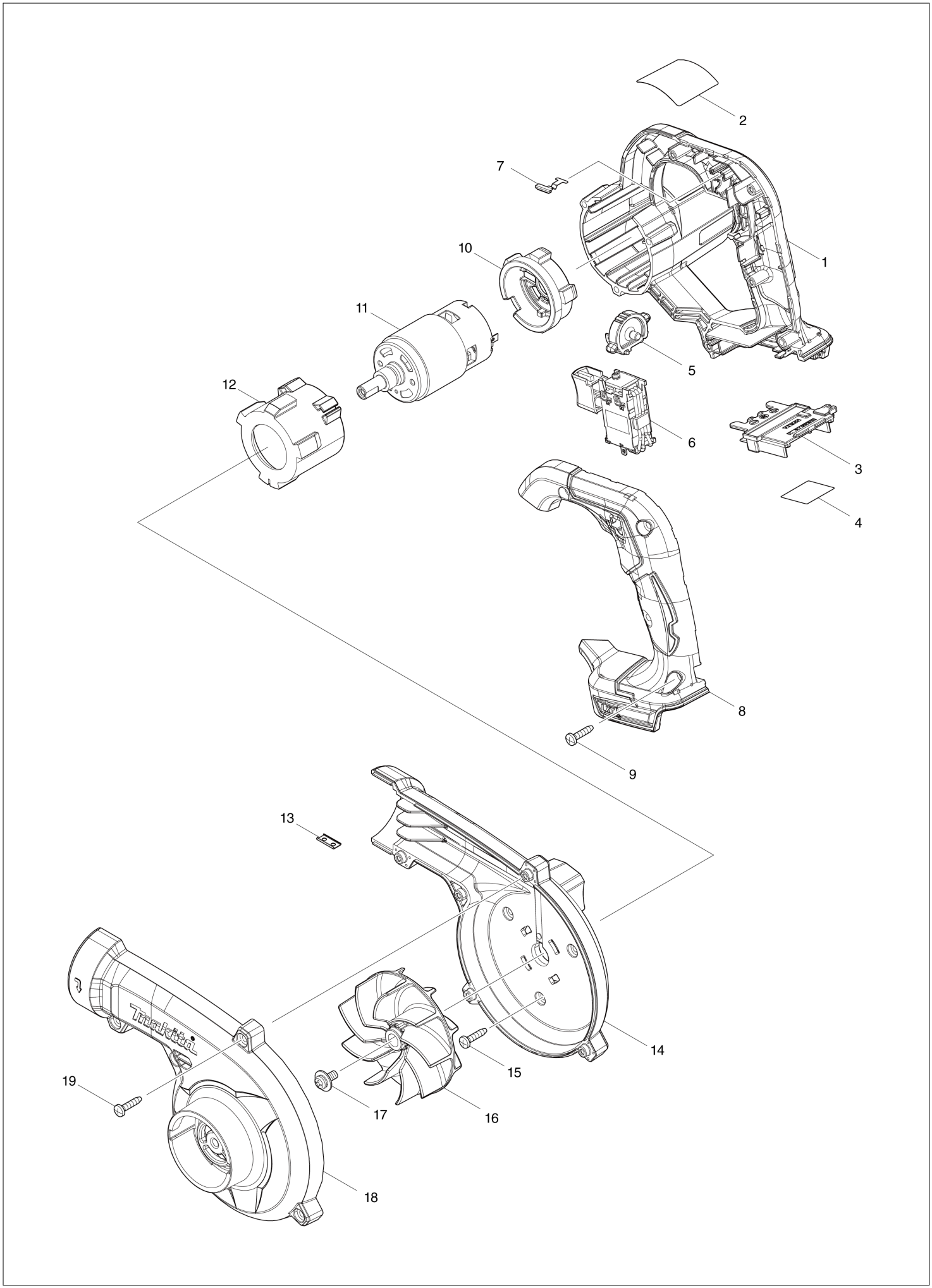

SE	SWEDEN

DUB186 / CORDLESS BLOWER

Item	Sub	Parts No.	Parts Description	Qty	I/C	E/C No.	Close No.	Remark
001		183P63-8	MOTOR HOUSING SET	1				
	D10		INC. 8					
002		856X46-6	DUB186 NAME PLATE	1				
003		643874-2	TERMINAL	1				
004		856X53-9	DUB186 SERIAL NO. LABEL	1				
005		412573-5	DIAL	1				
006A		632P93-1	SWITCH UNIT	1			D4806	
006-1A		632R69-0	SWITCH UNIT	1	<	D4806		
006-1B		632R69-0	SWITCH UNIT	1				
007		232620-4	LEAF SPRING	1				
008		183P63-8	MOTOR HOUSING SET	1				
	D10		INC. 1					
009		266326-2	TAPPING SCREW 4X18	5				
010		422589-2	MOTOR RUBBER RING B	1				
011		629484-9	DC MOTOR	1				
012		422588-4	MOTOR RUBBER RING A	1				
013		345998-7	SET PLATE	1				
014		140U56-8	FAN HOUSING COMPLETE	1				
	C10	8012T7-9	CAUTION LABEL	1				
015		266326-2	TAPPING SCREW 4X18	3				
016		240210-9	FAN 85	1				
017		265B25-5	PAN HEAD SCREW M5X12 WITH WG	1				
018		412572-7	FAN COVER	1				
019		266326-2	TAPPING SCREW 4X18	5				
A02		191G09-6	GARDEN NOZZLE ASSEMBLY SET	1				
	C10	412574-3	JOINT	1				
A06B		123245-4	NOZZLE ASS'Y	1				
	C10	454703-2	JOINT	1				
E01		807950-8	SOUND 95DB LABEL	1				

A:DUB186Z(N)
B:DUB186ZX1(N)

Interchange
O : Yes
X : No
< : the new part can be substituted for the current.
> : the current part can be substituted for the new.
S : Interchangeable as a set.